Wall/Pole Mount Kit for RRU 4000, ARU 3000, WRA 7070

Wall/pole mount kit for installing RRU 4000 and ARU 3000 readers and WRA 7070 antennas (up to 8.0 kg total weight).

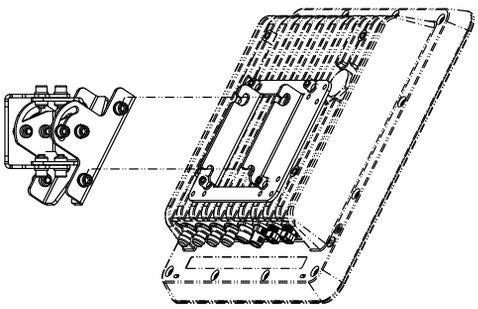

General Specifications

Order No.		52010351
Type		MK-WPM3-OSS
Weight	[kg]	1.1
Max. load-bearing capacity	[kg]	8
Adjustment range		
Elevation		±45°
Azimuth		±45°
Dimensions	[mm]	154 x 124 x 89
Package size (L x W x H)	[mm]	154 x 124 x 89
Degree of protection		outdoor
Material		stainless steel

Usable with the Following Readers

RRU 4000 Reader Series	Order No.	Type
	52010287 + 52010295	RRU 4400 Reader Unit
	52010288 + 52010296	RRU 4500 Reader Unit
	52020289 + 52010297	RRU 4560 Reader Unit
	52020290 + 52010298	RRU 4570 Reader Unit
ARU 3000 Reader Series	**Order No.**	**Type**
	52010291 + 52010299	ARU 3400 Reader Unit
	52010292 + 52010300	ARU 3500 Reader Unit
	52020293 + 52010301	ARU 3560 Reader Unit
	52020294 + 52010302	ARU 3570 Reader Unit
WRA 7070 Antenna Series	**Order No.**	**Type**
	52010333 + 52010334	WRA 7070 Antenna
	52010335 + 52010336	WRA 7070 KRAI Antenna

Accessories, optional

- Mast clamp (order no. 52010368)
- For more information about accessories, go to https://www.kathrein-solutions.com/products/hardware/accessories.

936B175 /a/0917 | Subject to change.

KATHREIN Solutions GmbH, Kronstaudener Weg 1, 83071 Stephanskirchen, Germany
Phone +49 8036 90831-20 | Fax +49 8036 90831 69 | www.kathrein-solutions.com | iot-info@kathrein-solutions.com

Scope of Delivery

- 1 x wall bracket, premounted (12 screws DIN912-M6x14, wall mounting plate, universal joint, mounting plate)
- 1 x adapter plate
- 4 x M6x12 screws
- 4 x washers

Dimensions [mm]

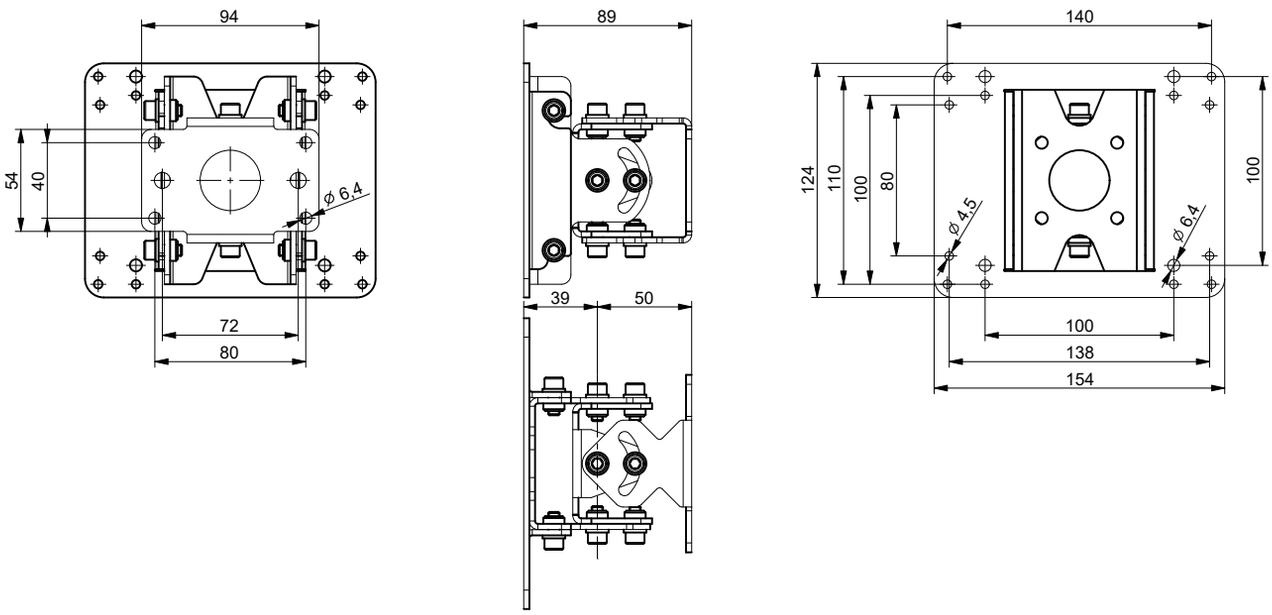

Selecting the Installation Site

WARNING

Danger to life due to electric shock!

- ► Before drilling the holes, make sure there are no electrical cables in the wall.
- ► Make sure that the wall/mast have sufficient load-bearing capacity.
- ► Make sure to use suitable fastenings (not included in the scope of delivery).
- ► If necessary, reinforce the wall at the chosen installation location or use a different mast.

936B175 /a/0917 | Subject to change.

KATHREIN Solutions GmbH, Kronstaudener Weg 1, 83071 Stephanskirchen, Germany
Phone +49 8036 90831-20 | Fax +49 8036 90831 69 | www.kathrein-solutions.com | iot-info@kathrein-solutions.com

Mounting the Mounting Kit

1. Install the mounting kit in the installation location.

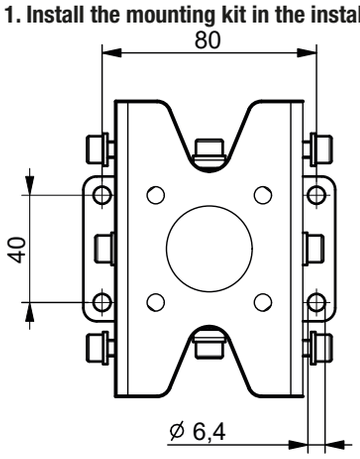

a) Wall Mounting

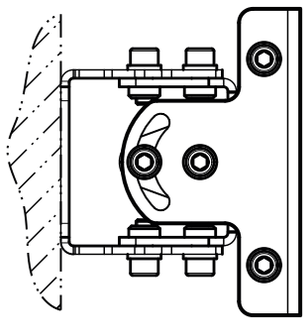

b) Pole Mounting with Optional Mast Clamp (Order No. 52010368)

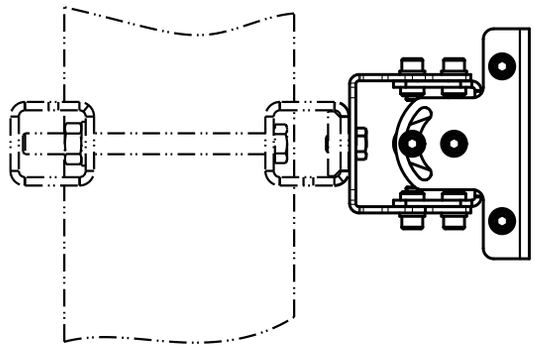

2. Set the inclination angle.

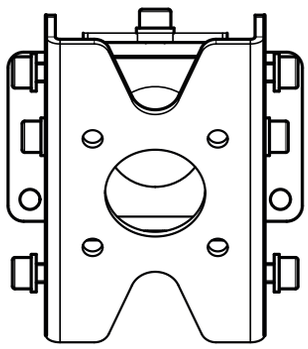

3. Lock the inclination angle by fastening the fixing screw.

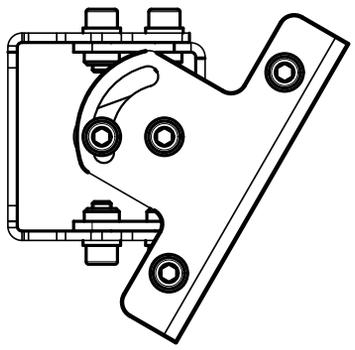

4. Set the swivel angle.

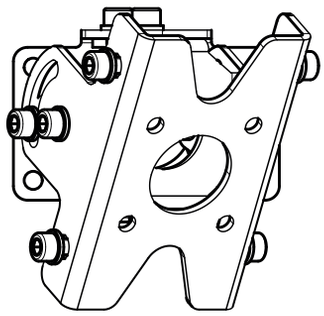

5. Lock the swivel angle by fastening the fixing screw.

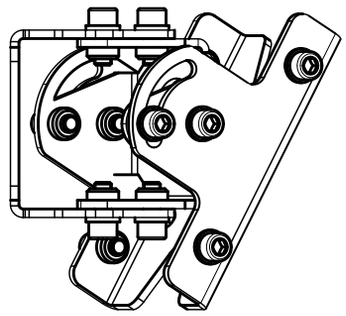

6. Screw the devices and adapter plate together using the 4 screws and washers (included in the scope of delivery). The tightening torque is 5 N_m.

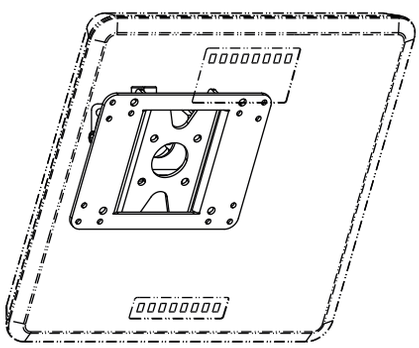

7. Insert the devices into the mounting kit and lock it.

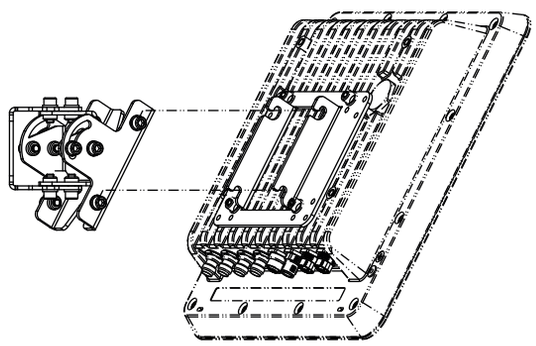

KATHREIN Solutions GmbH, Kronstaudener Weg 1, 83071 Stephanskirchen, Germany
Phone +49 8036 90831-20 | Fax +49 8036 90831 69 | www.kathrein-solutions.com | iot-info@kathrein-solutions.com